TEMPO MATÉRIAUX

www.tempolistel.com www.myaccesspanels.co.uk

TECHNICAL DATA SHEET

TEMPOLISTEL B116
Flat LED profile

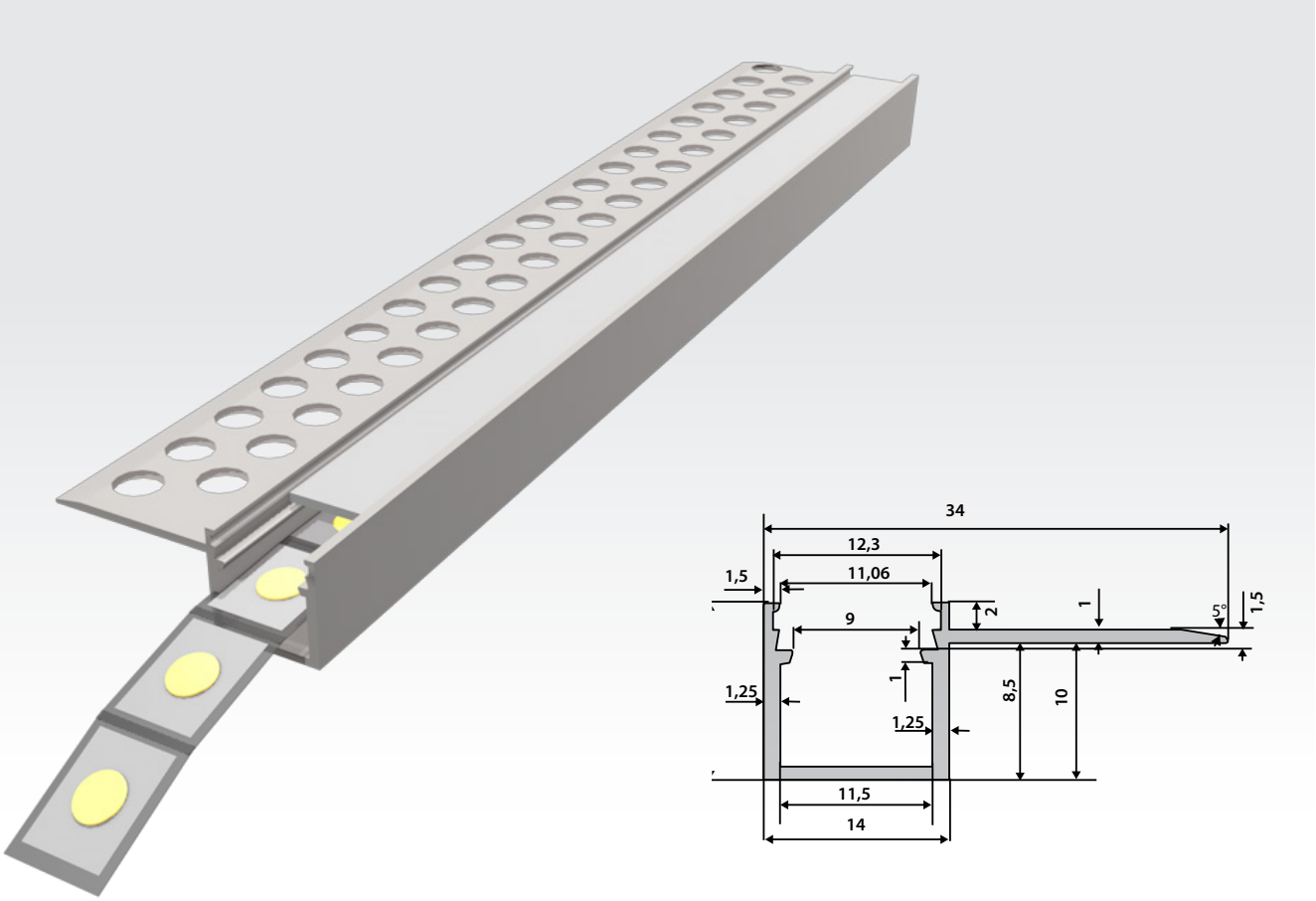

APPLICATION

Ideal for creating a cavity joint between a plasterboard false ceiling and a demountable false ceiling.

Ref.: 400B116

DESCRIPTION

Frame type:
Decorative profile

Use:
Plasterboard structures

Cladding colour:
RAL 9016 white

Length:
2500 mm

TECHNICAL DATA

Type of finish:
Painted

RAL colours available

TEMPO MATERIAUX Eurl
24 Rue Benjamin Silliman Junior
67550 Vendenheim,
France
Tel : +33 (0)3 88 26 15 71
info@tempolistel.fr

TEMPO MATÉRIAUX SRL
Boulevard Saint-Michel 65/6
1040 Etterbeek,
Belgium
Tel : +32 (0)2 430 25 84
info@tempolistel.be

TEMPO BAUSTOFFE GMBH
Tullastr. 1
68161 Mannheim,
Germany
Tel : +49 (0)173 57 66 793
info@tempolistel.de

TEMPO MATERIALEN B.V.
Rietbaan 2
2908 LP Capelle aan
den IJssel, Netherlands
Tel : +31 (0)10 322 04 62
info@tempolistel.nl